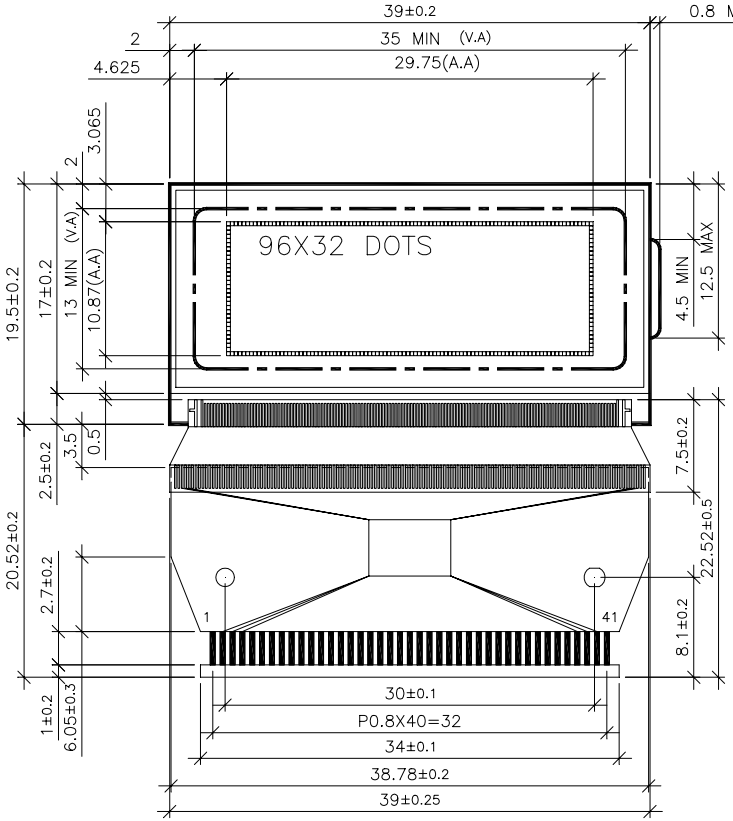

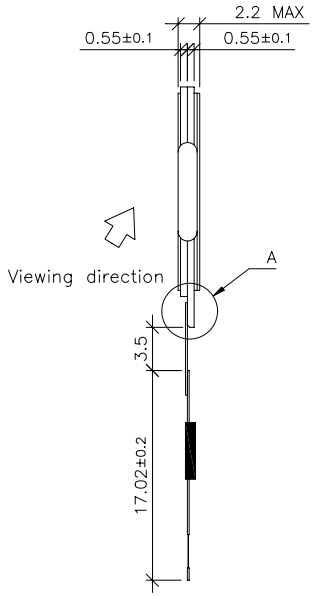

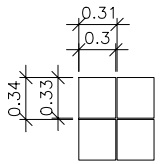

Detail of Dots
Scale 10/1

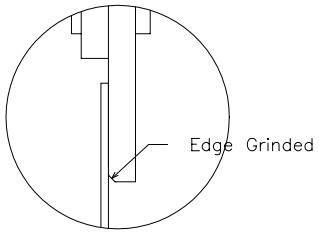

Detail A
Scale 8/1

PIN FUNCTIONS

1. NC	15.WR	29.CAP1+
2. FRS	16.RD	30.CAP1−
3. FR	17.VDD	31.CAP2+
4. DY0	18.D0	32.CAP2−
5. CL	19.D1	33.V5
6. D0F	20.D2	34.VR
7. VS1	21.D3	35.VDD
8. M/S	22.D4	36.V1
9. RES	23.D5	37.V2
10.P/S	24.D6	38.V3
11.CS1	25.D7	39.V4
12.CS2	26.VSS	40.V5
13.C86	27.VOUT	41.NC

Note: tolerance is ±0.3 unless otherwise noted.