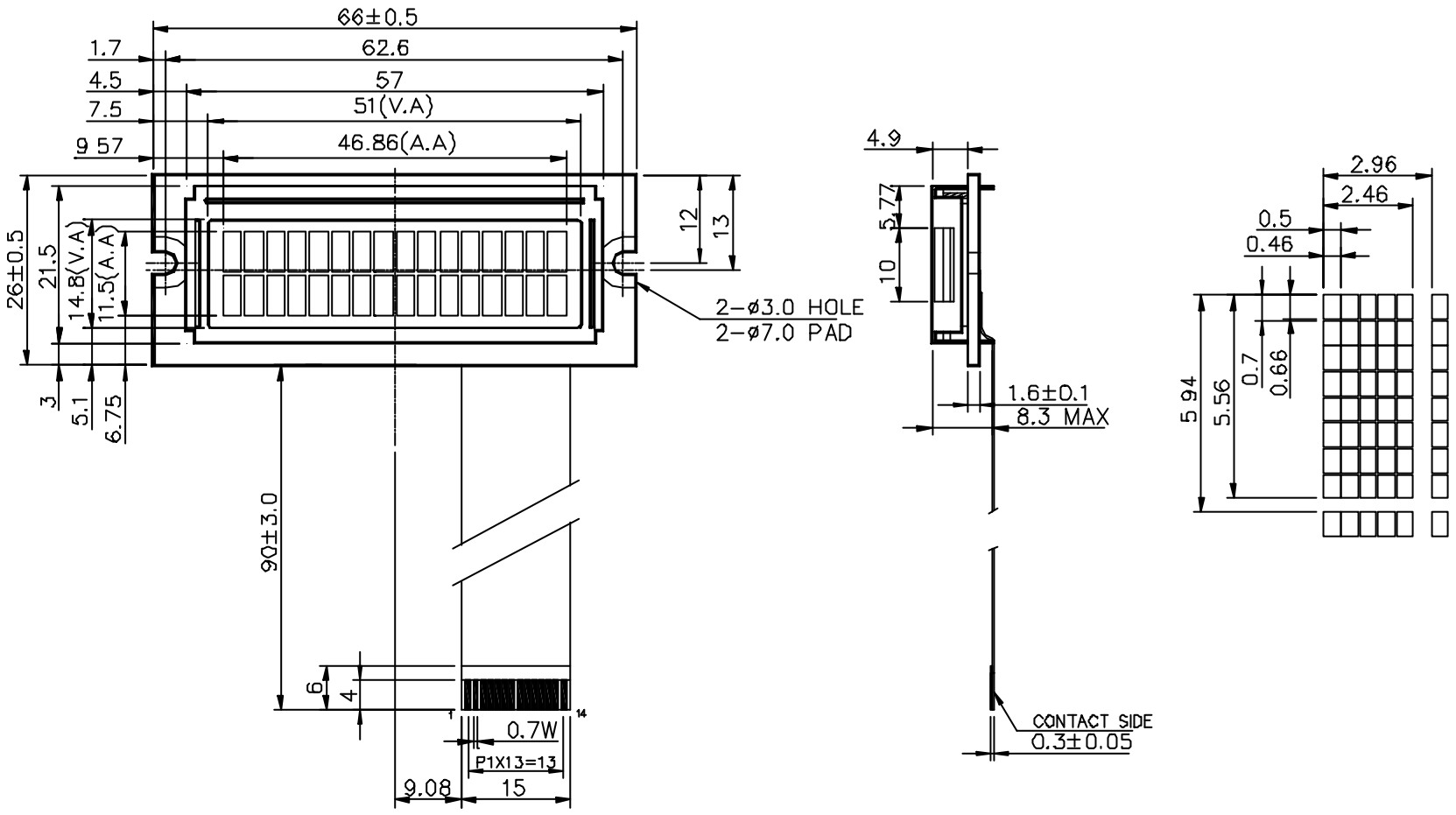
66±0.5
1.7
62.6
4.5
57
7.5
51(V.A)
9 57
46.86(A.A)
26±0.5
21.5
14.8(V.A)
11.5(A.A)
3
5.1
6.75
12
13
2-ø3.0 HOLE
2-ø7.0 PAD
90±3.0
6
4
1
14
0.7W
P1X13=13
9.08
15
4.9
5.77
10
1.6±0.1
8.3 MAX
CONTACT SIDE
0.3±0.05
2.96
2.46
0.5
0.46
5 94
5.56
0.7
0.66