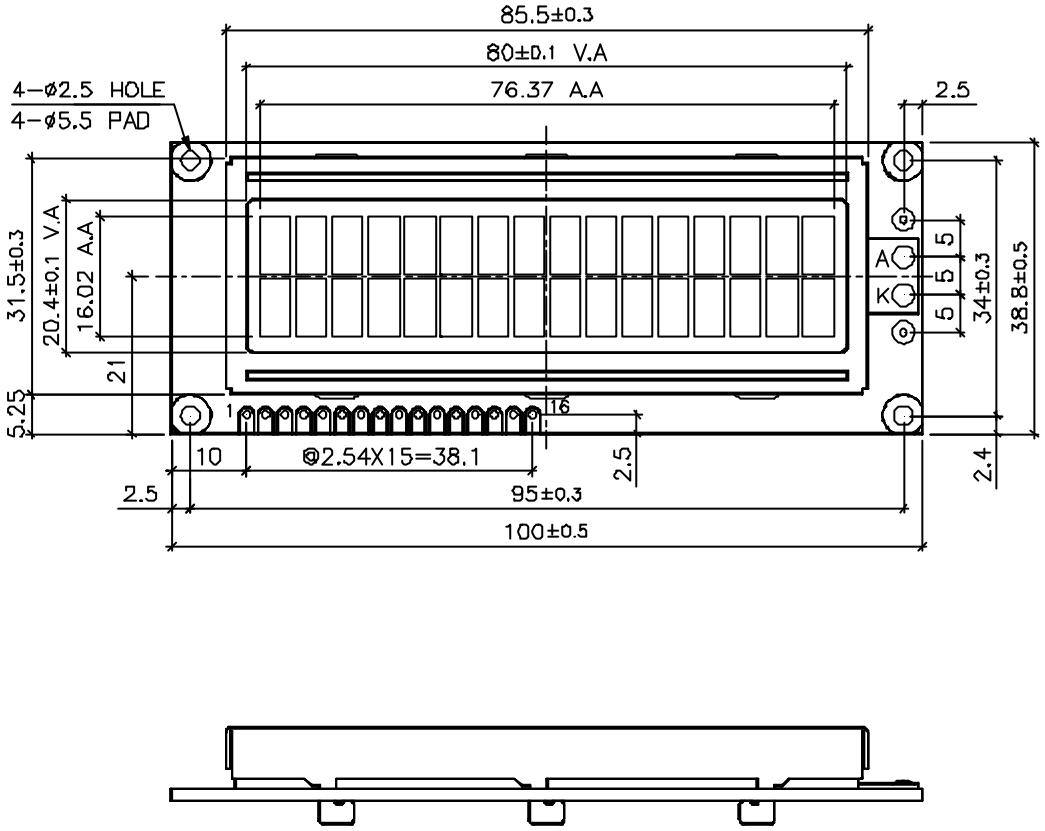
85.5±0.3
80±0.1 V.A
76.37 A.A
4-ø2.5 HOLE
4-ø5.5 PAD
2.5
31.5±0.3
20.4±0.1 V.A
16.02 A.A
21
5.25
A
K
5
5
5
34±0.3
38.8±0.5
1
16
10
@2.54X15=38.1
2.5
2.5
95±0.3
100±0.5
2.4

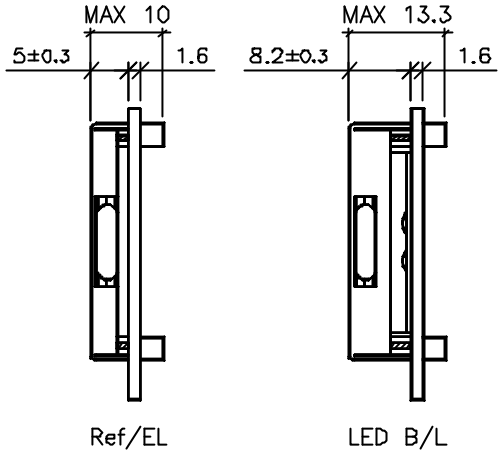
MAX 10
5±0.3
1.6
Ref/EL
MAX 13.3
8.2±0.3
1.6
LED B/L

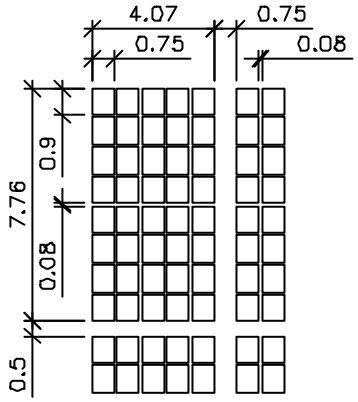
4.07
0.75
0.75
0.08
7.76
0.9
0.08
0.5